UNIT I Introduction and Physical Layer

Networks - Network Types - Protocol Layering - TCP/IP Protocol suite - OSI Model - Physical Layer: Performance - Transmission media - Switching - Circuit-switched Networks - Packet Switching.

INTRODUCTION

Data communications are the exchange of data between two devices via some form of transmission medium such as a wire cable. For data communications to occur, the communicating devices must be part of a communication system made up of a combination of hardware (physical equipment) and software (programs). The effectiveness of a data communications system depends on four fundamental characteristics: delivery, accuracy, timeliness, and jitter.

Delivery. The system must deliver data to the correct destination. Data must be received by the intended device or user and only by that device or user.

Accuracy. The system must deliver the data accurately. Data that have been altered in transmission and left uncorrected are unusable.

Timeliness. The system must deliver data in a timely manner. Data delivered late are useless. In the case of video and audio, timely delivery means delivering data as they are produced, in the same order that they are produced, and without significant delay. This kind of delivery is called *real-time* transmission.

Jitter. Jitter refers to the variation in the packet arrival time. It is the uneven delay in the delivery of audio or video packets. For example, let us assume that video packets are sent every 30 ms. If some of the packets arrive with 30-ms delay and others with 40-ms delay, an uneven quality in the video is the result.

Components

A data communications system has five components

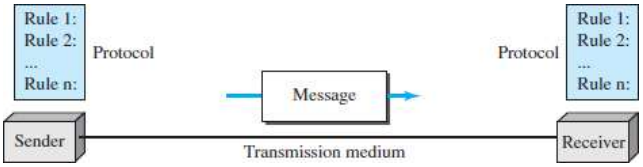

- **Message.** The **message** is the information (data) to be communicated. Popular forms of information include text, numbers, pictures, audio, and video.
- **Sender.** The **sender** is the device that sends the data message. It can be a computer, workstation, telephone handset, video camera, and so on.
- **Receiver.** The **receiver** is the device that receives the message. It can be a computer, workstation, telephone handset, television, and so on.
- **Transmission medium.** The **transmission medium** is the physical path by which a message travels from sender to receiver. Some examples of transmission media include twisted-pair wire, coaxial cable, fiber-optic cable, and radio waves.
- **Protocol.** A protocol is a set of rules that govern data communications. It represents an agreement between the communicating devices. Without a protocol, two devices may be connected but not communicating

DATA FLOW

Communication between two devices can be simplex, half-duplex, or full-duplex as shown in Figure

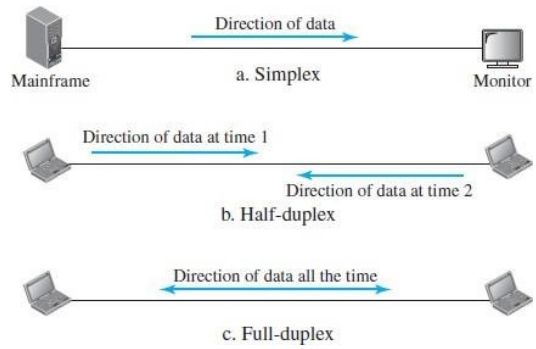

Simplex

In **simplex mode,** the communication is unidirectional, as on a one-way street. Only one of the two devices on a link can transmit; the other can only receive

Half-Duplex

In **half-duplex mode,** each station can both transmit and receive, but not at the same time.When one device is sending, the other can only receive, and vice versa

In **full-duplex mode** (also called *duplex*), both stations can transmit and receive simultaneously

Network Criteria

A network must be able to meet a certain number of criteria. The most important of these are performance, reliability, and security.

- Performance is often evaluated by two networking metrics: **throughput** and **delay.**
- Network **reliability** is measured by the frequency of failure, the time it takes a link
- Network **security** issues include protecting data from unauthorized access, protecting data from damage and development, and implementing policies and procedures for recovery from breaches and data losses.

Type of Connection

A network is two or more devices connected through links. A link is a communications pathway that transfers data from one device to another.

Point-to-Point

A **point-to-point connection** provides a dedicated link between two devices. The entire capacity of the link is reserved for transmission between those two devices.

Multipoint

A **multipoint** (also called **multidrop**) **connection** is one in which more than two specific devices share a single link

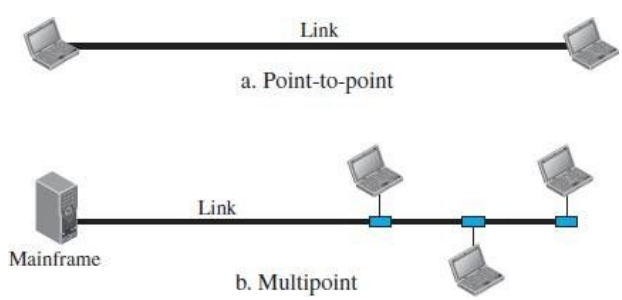

Network Topology

Network Topology refers to the physical layout or geographical orientation and the arrangement of various elements like links, nodes etc.

The various topologies are Bus topology, Ring topology, Star topology, Mesh Topology and Tree Topology

BUS TOPOLOGY

Bus topology is a network type in which every computer and network device is connected to single cable. When it has exactly two endpoints, then it is called Linear Bus topology.

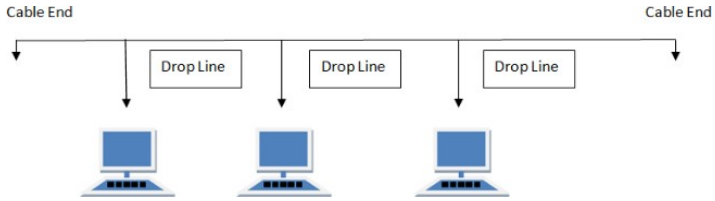

Features of Bus Topology

- It transmits data only in one direction.
- Every device is connected to a single cable

Advantages of Bus Topology

- It is cost effective.
- Cable required is least compared to other network topology.
- Used in small networks.
- It is easy to understand.
- Easy to expand joining two cables together.

Disadvantages of Bus Topology

- Cables fails then whole network fails.
- If network traffic is heavy or nodes are more the performance of the network decreases.
- Cable has a limited length.
- It is slower than the ring topology.

RING Topology

It is called ring topology because it forms a ring as each computer is connected to another computer, with the last one connected to the first. Exactly two neighbors for each device.

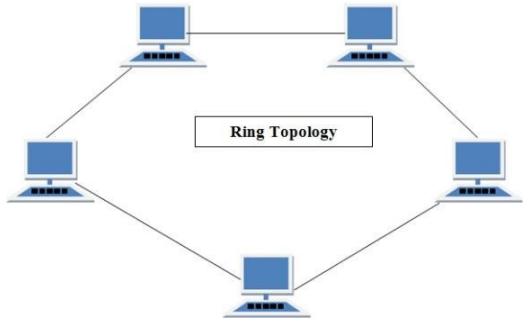

Features of Ring Topology

- A number of repeaters are used for Ring topology with large number of nodes, because if someone wants to send some data to the last node in the ring topology with 100 nodes, then the data will have to pass through 99 nodes to reach the 100th node. Hence to prevent data loss repeaters are used in the network.
- The transmission is unidirectional, but it can be made bidirectional by having 2 connections between each Network Node, it is called **Dual Ring Topology**.
- In Dual Ring Topology, two ring networks are formed, and data flow is in opposite direction in them. Also, if one ring fails, the second ring can act as a backup, to keep the network up.
- Data is transferred in a sequential manner that is bit by bit. Data transmitted, has to pass through each node of the network, till the destination node.

Advantages of Ring Topology

- Transmitting network is not affected by high traffic or by adding more nodes, as only the nodes having tokens can transmit data.
- Cheap to install and expand

Disadvantages of Ring Topology

- Troubleshooting is difficult in ring topology.
- Adding or deleting the computers disturbs the network activity.

- Failure of one computer disturbs the whole network.

STAR Topology

In this type of topology all the computers are connected to a single hub through a cable. This hub is the central node and all others nodes are connected to the central node.

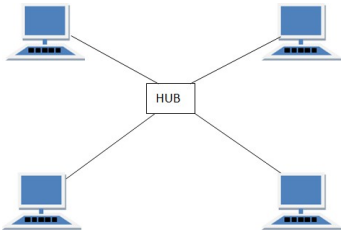

Features of Star Topology

- Every node has its own dedicated connection to the hub.
- Hub acts as a repeater for data flow.
- Can be used with twisted pair, Optical Fibre or coaxial cable.

Advantages of Star Topology

- Fast performance with few nodes and low network traffic.
- Hub can be upgraded easily.
- Easy to troubleshoot.
- Easy to setup and modify.
- Only that node is affected which has failed, rest of the nodes can work smoothly.

Disadvantages of Star Topology

- Cost of installation is high.
- Expensive to use.
- If the hub fails then the whole network is stopped because all the nodes depend on the hub.
- Performance is based on the hub that is it depends on its capacity

MESH Topology

It is a point-to-point connection to other nodes or devices. All the network nodes are connected to each other. Mesh has n(n-1)/2 physical channels to link n devices.

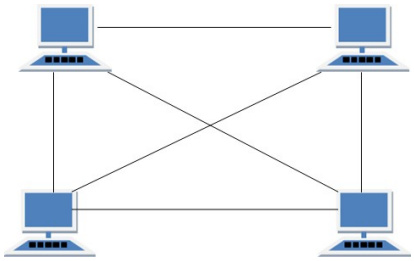

Features of Mesh Topology

- Fully connected.
- Robust.
- Not flexible.

Advantages of Mesh Topology

- Each connection can carry its own data load.
- It is robust.
- Fault is diagnosed easily.
- Provides security and privacy.

Disadvantages of Mesh Topology

- Installation and configuration is difficult.
- Cabling cost is more.
- Bulk wiring is required.

TREE Topology

It has a root node and all other nodes are connected to it forming a hierarchy. It is also called

hierarchical topology. It should at least have three levels to the hierarchy.

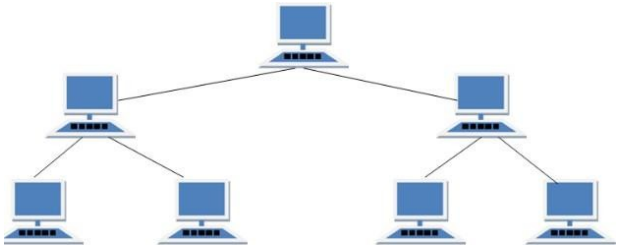

Features of Tree Topology

- Ideal if workstations are located in groups.
- Used in Wide Area Network.

Advantages of Tree Topology

- Extension of bus and star topologies.
- Expansion of nodes is possible and easy.
- Easily managed and maintained.
- Error detection is easily done.

Disadvantages of Tree Topology

- Heavily cabled.
- Costly.
- If more nodes are added maintenance is difficult.
- Central hub fails, network fails.

REE / HYBRID Topology

It is two different types of topologies which is a mixture of two or more topologies. For example if inan office in one department ring topology is used and in another star topology is used, connecting these topologies will result in Hybrid Topology (ring topology and star topology).

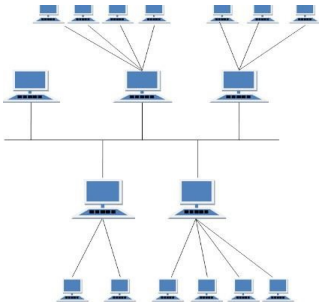

TYPES OF NETWORKS

The **Network** allows computers to **connect and communicate** with different computers via any medium. LAN, MAN and WAN are the three major types of the network designed to operate over the area they cover. There are some similarities and dissimilarities between them. One of the major differences is the geographical area they cover, i.e. **LAN** covers the smallest area; **MAN** covers an area larger than LAN and **WAN** comprises the largest of all

LAN (Local Area Network)

A **Local Area Network** is a privately owned computer **network** covering a **small Networks geographical area,** like a home, office, or groups of buildings e.g. a school Network. A LAN is used to connect the computers and other network devices so that the devices can communicate with each other to share the resources. The resources to be shared can be a hardware device like printer, software like an application program or data. The size of LAN is usually small. The various devices in LAN are connected to central devices called Hub or Switch using a cable.

MAN (Metropolitan Area Networks)

MAN stands for Metropolitan Area Networks is one of a number of types of networks. A MAN is a relatively new class of network. MAN is larger than a local area network and as its name implies, covers the area of a single city. MANs rarely extend beyond 100 KM and frequently comprise a combination of different hardware and transmission media. It can be single network such as a cable TV network, or it is a means of connecting a number of LANs into a larger network so that resources can be shared LAN to LAN as well as device to device.

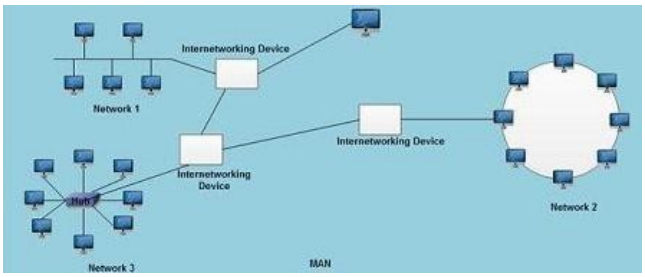

WAN (Wide Area Networks)

A wide area network (WAN) is a telecommunication network. A wide area network is simply a LAN of LANs or Network of Networks. WANs connect LANs that may be on opposite sides of a building, across the country or around the world. WANS are characterized by the slowest data communication rates and the largest distances. WANs can be of two types: an enterprise WAN and Global WAN.

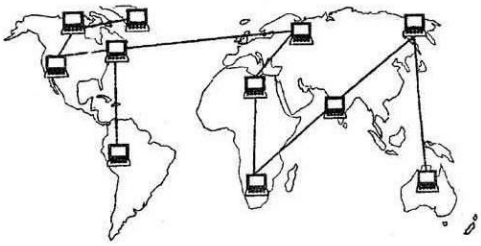

WAN

PROTOCOL AND LAYERING

OSI MODEL

- OSI stands for **Open System Interconnection** is a reference model that describes how information from a software application in one computer moves through a physical medium to the software application in another computer.
- OSI consists of seven layers, and each layer performs a particular network function.
- OSI model was developed by the International Organization for Standardization (ISO) in 1984, and it is now considered as an architectural model for the inter-computer communications.
- OSI model divides the whole task into seven smaller and manageable tasks. Each layer is assigned a particular task.
- Each layer is self-contained, so that task assigned to each layer can be performed independently.

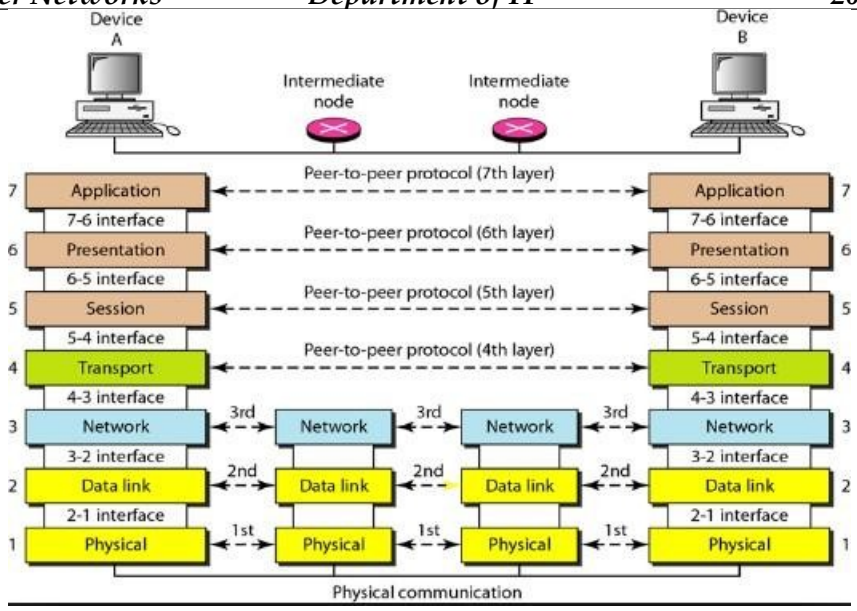

Physical Layer

- The main functionality of the physical layer is to transmit the individual bits from one node to another node.
- It is the lowest layer of the OSI model.
- It establishes, maintains and deactivates the physical connection.
- It specifies the mechanical, electrical and procedural network interface specifications.

Functions of a Physical layer:

- **Line Configuration:** It defines the way how two or more devices can be connected physically.
- **Data Transmission:** It defines the transmission mode whether it is simplex, half-duplex or full-duplex mode between the two devices on the network.
- **Topology:** It defines the way how network devices are arranged.
- **Signals:** It determines the type of the signal used for transmitting the information.

Data-Link Layer

- This layer is responsible for the error-free transfer of data frames.
- It defines the format of the data on the network.
- It provides a reliable and efficient communication between two or more devices.
- It is mainly responsible for the unique identification of each device that resides on a local network.

Functions of the Data-link layer

- **Physical Addressing:** The Data link layer adds a header to the frame that contains a destination address. The frame is transmitted to the destination address mentioned in the header.
- **Flow Control:** Flow control is the main functionality of the Data-link layer. It is the technique through which the constant data rate is maintained on both the sides so that no data get corrupted. It ensures that the transmitting station such as a server with higher processing speed does not exceed the receiving station, with lower processing speed.
- **Error Control:** Error control is achieved by adding a calculated value CRC (Cyclic Redundancy Check) that is placed to the Data link layer's trailer which is added to the message frame before it is sent to the physical layer. If any error seems to occurr, then the

receiver sends the acknowledgment for the retransmission of the corrupted frames.

- **Access Control:** When two or more devices are connected to the same communication channel, then the data link layer protocols are used to determine which device has control over the link at a given time.

Network Layer

- It is a layer 3 that manages device addressing, tracks the location of devices on the network.
- It determines the best path to move data from source to the destination based on the network conditions, the priority of service, and other factors.
- The Data link layer is responsible for routing and forwarding the packets.
- Routers are the layer 3 devices, they are specified in this layer and used to provide the routing services within an internetwork.
- The protocols used to route the network traffic are known as Network layer protocols. Examples of protocols are IP and Ipv6

Functions of Network Layer:

- **Addressing:** A Network layer adds the source and destination address to the header of the frame. Addressing is used to identify the device on the internet.
- **Routing:** Routing is the major component of the network layer, and it determines the best optimal path out of the multiple paths from source to the destination.

Transport Layer

- The Transport layer is a Layer 4 ensures that messages are transmitted in the order in which they are sent and there is no duplication of data.
- The main responsibility of the transport layer is to transfer the data completely.
- It receives the data from the upper layer and converts them into smaller units known as segments.
- This layer can be termed as an end-to-end layer as it provides a point-to-point connection between source and destination to deliver the data reliably.

Functions of Transport Layer:

- **Service-point addressing:** Computers run several programs simultaneously due to this reason, the transmission of data from source to the destination not only from one computer to another computer but also from one process to another process. The transport layer adds the header that contains the address known as a service-point address or port address. The responsibility of the network layer is to transmit the data from one computer to another computer and the responsibility of the transport layer is to transmit the message to the correct process.
- **Segmentation and reassembly:** When the transport layer receives the message from the upper layer, it divides the message into multiple segments, and each segment is assigned with a sequence number that uniquely identifies each segment. When the message has arrived at the destination, then the transport layer reassembles the message based on their sequence numbers.
- **Connection control:** Transport layer provides two services Connection-oriented service and connectionless service. A connectionless service treats each segment as an individual packet, and they all travel in different routes to reach the destination. A connection-oriented service makes a connection with the transport layer at the destination machine before delivering the packets. In connection-oriented service, all the packets travel in the single route.
- **Flow control:** The transport layer also responsible for flow control but it is performed end-to-end rather than across a single link.
- **Error control:** The transport layer is also responsible for Error control. Error control is performed end-to-end rather than across the single link. The sender transport layer ensures that message reach at the destination without any error.

Session Layer

- It is a layer 3 in the OSI model.

- The Session layer is used to establish, maintain and synchronizes the interaction between communicating devices.

Functions of Session layer:

- **Dialog control:** Session layer acts as a dialog controller that creates a dialog between two processes or we can say that it allows the communication between two processes which can be either half-duplex or full-duplex.
- **Synchronization:** Session layer adds some checkpoints when transmitting the data in a sequence. If some error occurs in the middle of the transmission of data, then the transmission will take place again from the checkpoint. This process is known as Synchronization and recovery.

Presentation Layer

- A Presentation layer is mainly concerned with the syntax and semantics of the information exchanged between the two systems.
- It acts as a data translator for a network.
- This layer is a part of the operating system that converts the data from one presentation format to another format.
- The Presentation layer is also known as the syntax layer.

Functions of Presentation layer:

- **Translation:** The processes in two systems exchange the information in the form of character strings, numbers and so on. Different computers use different encoding methods, the presentation layer handles the interoperability between the different encoding methods. It converts the data from sender-dependent format into a common format and changes the common format into receiver-dependent format at the receiving end.
- **Encryption:** Encryption is needed to maintain privacy. Encryption is a process of converting the sender-transmitted information into another form and sends the resulting message over the network.
- **Compression:** Data compression is a process of compressing the data, i.e., it reduces the number of bits to be transmitted. Data compression is very important in multimedia such as text, audio, video.

Application Layer

- An application layer serves as a window for users and application processes to access network service.
- It handles issues such as network transparency, resource allocation, etc.
- An application layer is not an application, but it performs the application layer functions.
- This layer provides the network services to the end-users.

Functions of Application layer:

- **File transfer, access, and management (FTAM):** An application layer allows a user to access the files in a remote computer, to retrieve the files from a computer and to manage the files in a remote computer.
- **Mail services:** An application layer provides the facility for email forwarding and storage.
- Directory services: An application provides the distributed database sources and is used to provide that global information about various objects.

TCP/IP model

- The TCP/IP model was developed prior to the OSI model.
- The TCP/IP model is not exactly similar to the OSI model.
- The TCP/IP model consists of five layers: the application layer, transport layer, network layer, data link layer and physical layer.
- The first four layers provide physical standards, network interface, internetworking, and transport functions that correspond to the first four layers of the OSI model and these four layers are represented in TCP/IP model by a single layer called the application layer.
- TCP/IP is a hierarchical protocol made up of interactive modules, and each of them provides specific functionality.

Here, hierarchical means that each upper-layer protocol is supported by two or more lower-level

protocol

Network Access Layer

- A network layer is the lowest layer of the TCP/IP model.
- A network layer is the combination of the Physical layer and Data Link layer defined in the OSI reference model.
- It defines how the data should be sent physically through the network.
- This layer is mainly responsible for the transmission of the data between two devices on the same network.
- The functions carried out by this layer are encapsulating the IP datagram into frames transmitted by the network and mapping of IP addresses into physical addresses.
- The protocols used by this layer are ethernet, token ring, FDDI, X.25, frame relay.

Functions of TCP/IP layers:

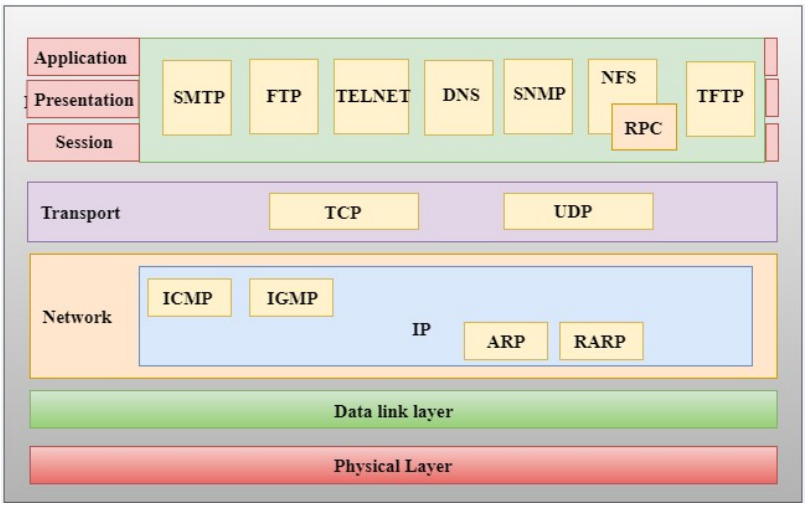

Internet Layer

- An internet layer is the second layer of the TCP/IP model.
- An internet layer is also known as the network layer.
- The main responsibility of the internet layer is to send the packets from any network, and they arrive at the destination irrespective of the route they take.

Following are the protocols used in this layer are:

IP Protocol: IP protocol is used in this layer, and it is the most significant part of the entire TCP/IP suite.

Transport Layer

The transport layer is responsible for the reliability, flow control, and correction of data which is being sent over the network.

The two protocols used in the transport layer are **User Datagram protocol and Transmission control protocol**.

Application Layer

- An application layer is the topmost layer in the TCP/IP model.
- It is responsible for handling high-level protocols, issues of representation.
- This layer allows the user to interact with the application.
- When one application layer protocol wants to communicate with another application layer, it

forwards its data to the transport layer.

- There is an ambiguity occurs in the application layer. Every application cannot be placed inside the application layer except those who interact with the communication system. For example: text editor cannot be considered in application layer while web browser using **HTTP** protocol to interact with the network where **HTTP** protocol is an application layer protocol.

Following are the main protocols used in the application layer:

- **HTTP:** HTTP stands for Hypertext transfer protocol. This protocol allows us to access the data over the world wide web. It transfers the data in the form of plain text, audio, video. It is known as a Hypertext transfer protocol as it has the efficiency to use in a hypertext environment where there are rapid jumps from one document to another.
- **SNMP:** SNMP stands for Simple Network Management Protocol. It is a framework used for managing the devices on the internet by using the TCP/IP protocol suite.
- **SMTP:** SMTP stands for Simple mail transfer protocol. The TCP/IP protocol that supports the e-mail is known as a Simple mail transfer protocol. This protocol is used to send the data to another e-mail address.
- **DNS:** DNS stands for Domain Name System. An IP address is used to identify the connection of a host to the internet uniquely. But, people prefer to use the names instead of addresses. Therefore, the system that maps the name to the address is known as Domain Name System.
- **TELNET:** It is an abbreviation for Terminal Network. It establishes the connection between the local computer and remote computer in such a way that the local terminal appears to be a terminal at the remote system.
- **FTP:** FTP stands for File Transfer Protocol. FTP is a standard internet protocol used for transmitting the files from one computer to another computer.

TRANSMISSION MEDIA

- Transmission media is a communication channel that carries the information from the sender to the receiver. Data is transmitted through the electromagnetic signals.
- The main functionality of the transmission media is to carry the information in the form of bits through **LAN**(Local Area Network).
- It is a physical path between transmitter and receiver in data communication.
- In a copper-based network, the bits in the form of electrical signals.
- In a fibre based network, the bits in the form of light pulses.

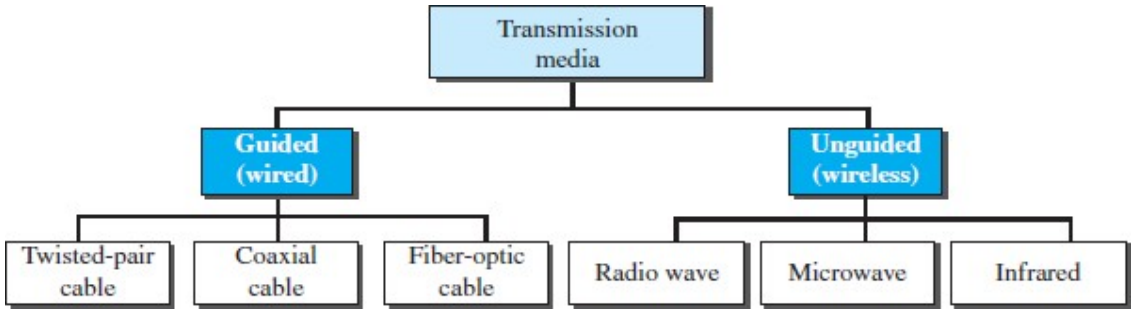

1. Guided Media:

It is also referred to as Wired or Bounded transmission media. Signals being transmitted are directed and confined in a narrow pathway by using physical links.

Features:

- High Speed
- Secure
- Used for comparatively shorter distances

There are 3 major types of Guided Media:

***(i)* Twisted Pair Cable -**

It consists of 2 separately insulated conductor wires wound about each other. Generally, several such pairs are bundled together in a protective sheath. They are the most widely used Transmission Media. Twisted Pair is of two types:

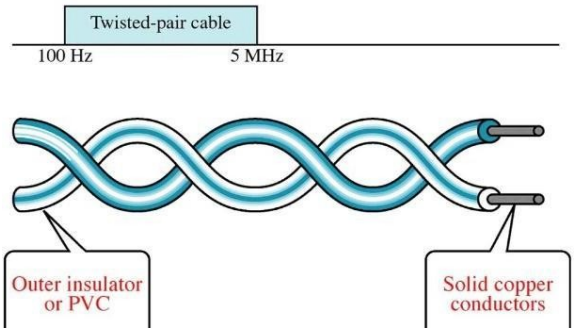

1. **Unshielded Twisted Pair (UTP):**
   This type of cable has the ability to block interference and does not depend on a physical shield for this purpose. It is used for telephonic applications.
   Advantages:
   - Least expensive
   - Easy to install
   - High speed capacity

   Disadvantages:
   - Susceptible to external interference
   - Lower capacity and performance in comparison to STP
   - Short distance transmission due to attenuation
2. **Shielded Twisted Pair (STP):**
   This type of cable consists of a special jacket to block external interference. It is used in fast-data-rate Ethernet and in voice and data channels of telephone lines.
   Advantages:
   - Better performance at a higher data rate in comparison to UTP
   - Eliminates crosstalk
   - Comparitively faster

   Disadvantages:
   - Comparitively difficult to install and manufacture
   - More expensive
   - Bulky

***(ii)* Coaxial Cable -**

It has an outer plastic covering containing 2 parallel conductors each having a separate insulated protection cover. Coaxial cable transmits information in two modes: Baseband mode(dedicated cable bandwidth) and Broadband mode(cable bandwidth is split into separate ranges). Cable TVs and analog television networks widely use Coaxial cables.

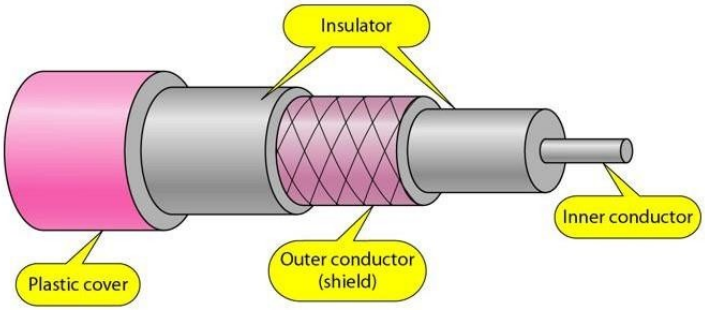

Advantages:

- High Bandwidth
- Better noise Immunity
- Easy to install and expand
- Inexpensive

Disadvantages:

- Single cable failure can disrupt the entire network

***(iii)* Optical Fibre Cable -**

It uses the concept of reflection of light through a core made up of glass or plastic.The core is surrounded by a less dense glass or plastic covering called the cladding. It is used for transmission of large volumes of data.

Advantages:

- Increased capacity and bandwidth
- Light weight
- Less signal attenuation
- Immunity to electromagnetic interference
- Resistance to corrosive materials

Disadvantages:

- Difficult to install and maintain
- High cost
- Fragile
- unidirectional, ie, will need another fibre, if we need bidirectional communication

2. Unguided Media:

It is also referred to as Wireless or Unbounded transmission media.No physical medium is required for the transmission of electromagnetic signals.

Features:

- Signal is broadcasted through air
- Less Secure
- Used for larger distances

There are 3 major types of Unguided Media:

***(i)* Radiowaves -**

These are easy to generate and can penetrate through buildings. The sending and receiving antennas need not be aligned. Frequency Range:3KHz – 1GHz. AM and FM radios and cordless phones use Radiowaves for transmission.

Further Categorized as (i) Terrestrial and (ii) Satellite.

***(ii)* Microwaves -**

It is a line of sight transmission i.e. the sending and receiving antennas need to be properly aligned with each other. The distance covered by the signal is directly proportional to the height of the antenna. Frequency Range:1GHz – 300GHz. These are majorly used for mobile phone

communication and television distribution.

***(iii)* Infrared -**

Infrared waves are used for very short distance communication. They cannot penetrate through obstacles. This prevents interference between systems. Frequency Range:300GHz – 400THz. It is used in TV remotes, wireless mouse, keyboard, printer, etc.

SWITCHING

A switched network consists of a series of interlinked nodes, called switches. Switches are devices capable of creating temporary connections between two or more devices linked to the switch. In a switched network, some of these nodes are connected to the end systems (computers or telephones, for example). Others are used only for routing. Figure Shows the Switched Networks.

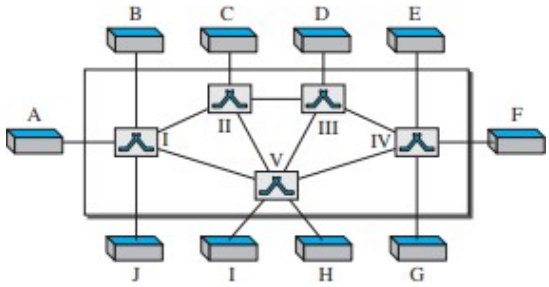

Taxonomy of Switches

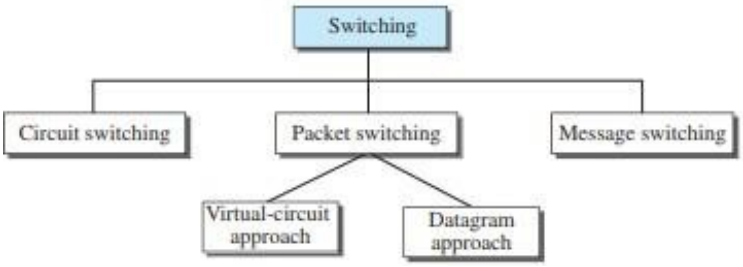

Circuit-switched network

A circuit-switched network consists of a set of switches connected by physical links. A connection between two stations is a dedicated path made of one or more links. However, each connection uses only one dedicated channel on each link. Each link is normally divided into n channels by using FDM or TDM. Figure shows a trivial circuit-switched network with four switches and four links. Each link is divided into n (n is 3 in the figure) channels by using FDM or TDM

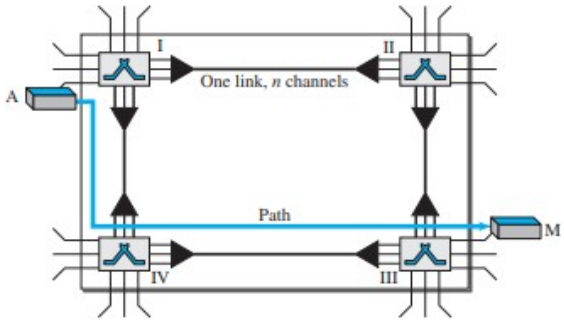

Circuit switching takes place at the physical layer.

- Before starting communication, the stations must make a reservation for the resources to be used during the communication. These resources, such as channels (bandwidth in FDM and time slots in TDM), switch buffers, switch processing time, and switch input/output ports, must remain dedicated during the entire duration of data transfer until the teardown phase.
- Data transferred between the two stations are not packetized (physical layer transfer of the signal). The data are a continuous flow sent by the source station and received by the destination station, although there may be periods of silence.

- There is no addressing involved during data transfer. The switches route the data based on their occupied band (FDM) or time slot (TDM). Of course, there is end-toend addressing used during the setup phase, as we will see shortly.

Three Phases:

The actual communication in a circuit-switched network requires three phases: connection setup, data transfer, and connection teardown.

Setup Phase :

Before the two parties (or multiple parties in a conference call) can communicate, a dedicated circuit (combination of channels in links) needs to be established. The end systems are normally connected through dedicated lines to the switches, so connection setup means creating dedicated channels between the switches.

Data-Transfer Phase

After the establishment of the dedicated circuit (channels), the two parties can transfer data.

Teardown Phase

When one of the parties needs to disconnect, a signal is sent to each switch to release the resources.

Delay

Although a circuit-switched network normally has low efficiency, the delay in this type of network is minimal. During data transfer the data are not delayed at each switch; the resources are allocated for the duration of the connection. Figure shows the idea of delay in a circuit-switched network when only two switches are involved.

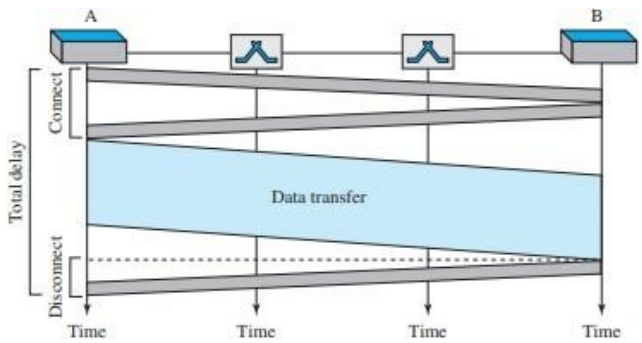

Figure shows, there is no waiting time at each switch. The total delay is due to the time needed to create the connection, transfer data, and disconnect the circuit. The delay caused by the setup is the sum of four parts: the propagation time of the source computer request (slope of the first gray box), the request signal transfer time (height of the first gray box), the propagation time of the acknowledgment from the destination computer (slope of the second gray box), and the signal transfer time of the acknowledgment (height of the second gray box). The delay due to data transfer is the sum of two parts: the propagation time (slope of the colored box) and data transfer time (height of the colored box), which can be very long. The third box shows the time needed to tear down the circuit. We have shown the case in which the receiver requests disconnection, which creates the maximum delay.

PACKET SWITCHING

In data communications, we need to send messages from one end system to another. If the message is going to pass through a packet-switched network, it needs to be divided into packets of fixed or variable size. The size of the packet is determined by the network and the governing protocol. In packet switching, there is no resource allocation for a packet. This means that there is no reserved bandwidth on the links, and there is no scheduled processing time for each packet. Resources are allocated on demand. The allocation is done on a firstcome, first-served basis. When a switch receives a packet, no matter what the source or destination is, the packet must wait if there are other packets being processed.

Datagram Networks

In a datagram network, each packet is treated independently of all others. Even if a packet is part of a

multi -packet transmission, the network treats it as though it existed alone. Packets in this approach are referred to as datagrams. Figure shows how the datagram approach is used to deliver four packets from station A to station X. The switches in a datagram network are traditionally referred to as routers.

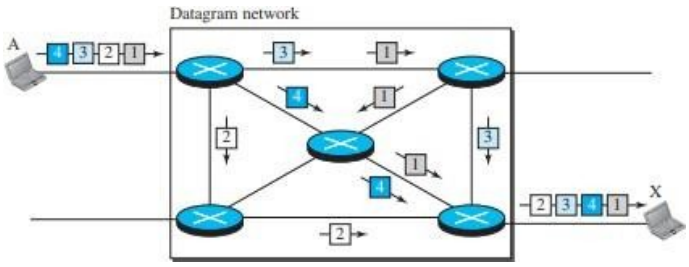

All four packets (or datagrams) belong to the same message, but may travel different paths to reach their destination. This is so because the links may be involved in carrying packets from other sources and do not have the necessary bandwidth available to carry all the packets from A to X. This approach can cause the datagrams of a transmission to arrive at their destination out of order with different delays between the packets. Packets may also be lost or dropped because of a lack of resources.

The datagram networks are sometimes referred to as connectionless networks. The term connectionless here means that the switch (packet switch) does not keep information about the connection state. There are no setup or teardown phases. Each packet is treated the same by a switch regardless of its source or destination. The routing tables are dynamic and are updated periodically. The destination addresses and the corresponding forwarding output ports are recorded in the tables and the below figure.

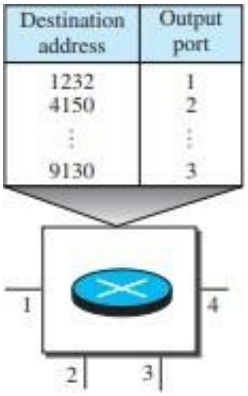

Destination address	Output port
1232	1
4150	2
⋮	⋮
9130	3

Delay

There may be greater delay in a datagram network than in a virtual-circuit network. Although there are no setup and teardown phases, each packet may experience a wait at a switch before it is forwarded. In addition, since not all packets in a message necessarily travel through the same switches, the delay is not uniform for the packets of a message. Figure below gives an example of delay in a datagram network for one packet.

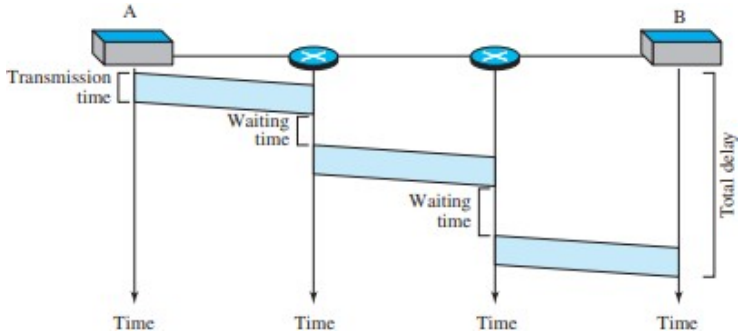

The packet travels through two switches. There are three transmission times (3T), three propagation delays (slopes 3τ of the lines), and two waiting times (w1 + w2). We ignore the processing time in

each switch. The total delay is

$$\text{Total delay} = 3T + 3\tau + w_1 + w_2$$

Virtual-Circuit Networks

A virtual-circuit network is a cross between a circuit-switched network and a datagram network. It has some characteristics of both.

1. As in a circuit-switched network, there are setup and teardown phases in addition to the data transfer phase.
2. Resources can be allocated during the setup phase, as in a circuit-switched network, or on demand, as in a datagram network.
3. As in a datagram network, data are packetized and each packet carries an address in the header. However, the address in the header has local jurisdiction (it defines what the next switch should be and the channel on which the packet is being carried), not end-to-end jurisdiction. The reader may ask how the intermediate switches know where to send the packet if there is no final destination address carried by a packet. The answer will be clear when we discuss virtual-circuit identifiers in the next section.
4. As in a circuit-switched network, all packets follow the same path established during the connection. A virtual-circuit network is normally implemented in the data-link layer, while a circuit-switched network is implemented in the physical layer and a datagram network in the network layer. But this may change in the future. Figure below is an example of a virtual-circuit network. The network has switches that allow traffic from sources to destinations. A source or destination can be a computer, packet switch, bridge, or any other device that connects other networks.

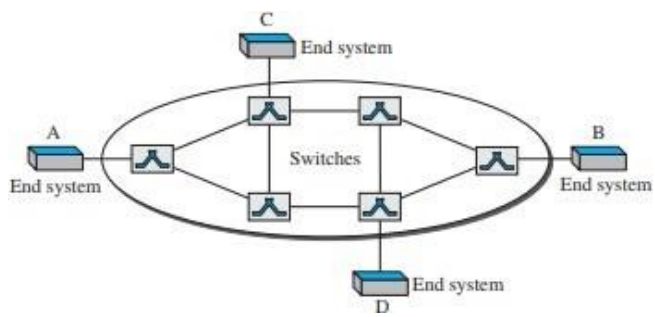

Addressing

In a virtual-circuit network, two types of addressing are involved: global and local (virtual-circuit identifier). Global Addressing A source or a destination needs to have a global address—an address that can be unique in the scope of the network or internationally if the network is part of an international network.

Virtual-Circuit Identifier

The identifier that is actually used for data transfer is called the virtual-circuit identifier (VCI) or the label. A VCI, unlike a global address, is a small number that has only switch scope; it is used by a frame between two switches. When a frame arrives at a switch, it has a VCI; when it leaves, it has a different VCI. Figure shows how the VCI in a data frame changes from one switch to another. Note that a VCI does not need to be a large number since each switch can use its own unique set of VCIs.

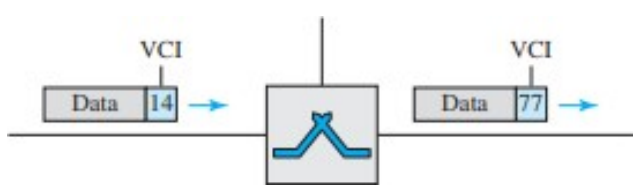

Three Phases

As in a circuit-switched network, a source and destination need to go through three phases in a virtual-circuit network: setup, data transfer, and teardown. In the setup phase, the source and destination use their global addresses to help switches make table entries for the connection. In the teardown phase, the source and destination inform the switches to delete the corresponding entry.

Setup Phase

In the setup phase, a switch creates an entry for a virtual circuit. For example, suppose source A needs to create a virtual circuit to B. Two steps are required: the setup request and the acknowledgment.

Setup Request

A setup request frame is sent from the source to the destination. Figure shows the process. Source A sends a setup frame to switch 1.

- Switch 1 receives the setup request frame. It knows that a frame going from A to B goes out through port 3. How the switch has obtained this information is a point covered in future chapters. The switch, in the setup phase, acts as a packet switch; it has a routing table which is different from the switching table. For the moment, assume that it knows the output port. The switch creates an entry in its table for this virtual circuit, but it is only able to fill three of the four columns. The switch assigns the incoming port (1) and chooses an available incoming VCI (14) and the outgoing port (3). It does not yet know the outgoing VCI, which will be found during the acknowledgment step. The switch then forwards the frame through port 3 to switch 2.

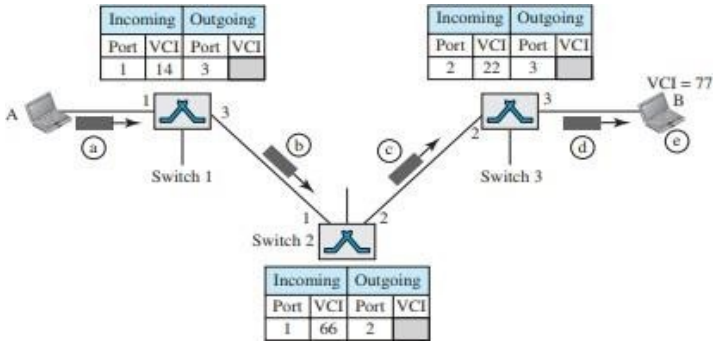

- Switch 2 receives the setup request frame.The same events happen here as at switch 1; three columns of the table are completed: in this case, incoming port (1), incoming VCI (66), and outgoing port (2).
- Switch 3 receives the setup request frame. Again, three columns are completed: incoming port (2), incoming VCI (22), and outgoing port (3).
- Destination B receives the setup frame, and if it is ready to receive frames from A, it assigns a VCI to the incoming frames that come from A, in this case 77. This VCI lets the destination know that the frames come from A, and not other sources.

Acknowledgment

A special frame, called the acknowledgment frame, completes the entries in the switching tables. Figure shows the process.

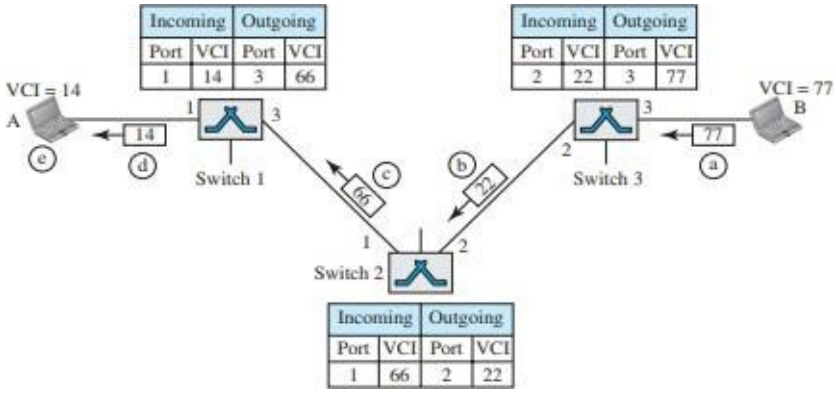

The destination sends an acknowledgment to switch 3. The acknowledgment carries the global source and destination addresses so the switch knows which entry in the table is to be completed.

The frame also carries VCI 77, chosen by the destination as the incoming VCI for frames from A. Switch 3 uses this VCI to complete the outgoing VCI column for this entry. Note that 77 is the incoming VCI for destination B, but the outgoing VCI for switch 3.

- Switch 3 sends an acknowledgment to switch 2 that contains its incoming VCI in the table, chosen in the previous step. Switch 2 uses this as the outgoing VCI in the table.
- Switch 2 sends an acknowledgment to switch 1 that contains its incoming VCI in the table, chosen in the previous step. Switch 1 uses this as the outgoing VCI in the table.
- Finally switch 1 sends an acknowledgment to source A that contains its incoming VCI in the table, chosen in the previous step.
- The source uses this as the outgoing VCI for the data frames to be sent to destination B.

Data-Transfer Phase

To transfer a frame from a source to its destination, all switches need to have a table entry for this virtual circuit. The table, in its simplest form, has four columns. This means that the switch holds four pieces of information for each virtual circuit that is already set up

Teardown Phase

In this phase, source A, after sending all frames to B, sends a special frame called a teardown request. Destination B responds with a teardown confirmation frame. All switches delete the corresponding entry from their tables.

Figure shows such a switch and its corresponding table.

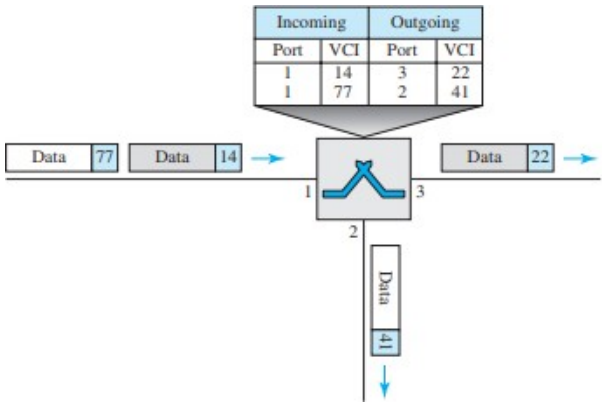

Delay in Virtual-Circuit Networks

In a virtual-circuit network, there is a one-time delay for setup and a one-time delay for teardown. If resources are allocated during the setup phase, there is no wait time for individual packets. Figure shows the delay for a packet traveling through two switches in a virtual-circuit network.

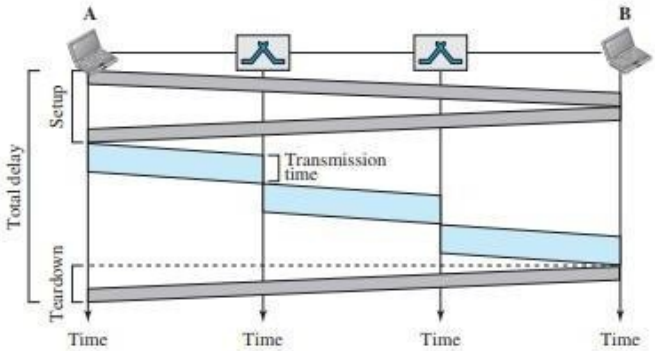

The packet is traveling through two switches (routers). There are three transmission times (3T), three propagation times (3τ), data transfer depicted by the sloping lines, a setup delay (which includes transmission and propagation in two directions), and a teardown delay (which includes transmission and propagation in one direction). We ignore the processing time in each switch. The total delay time is

$$\text{Total delay} + 3T + 3\tau + \text{setup delay} + \text{teardown delay}$$